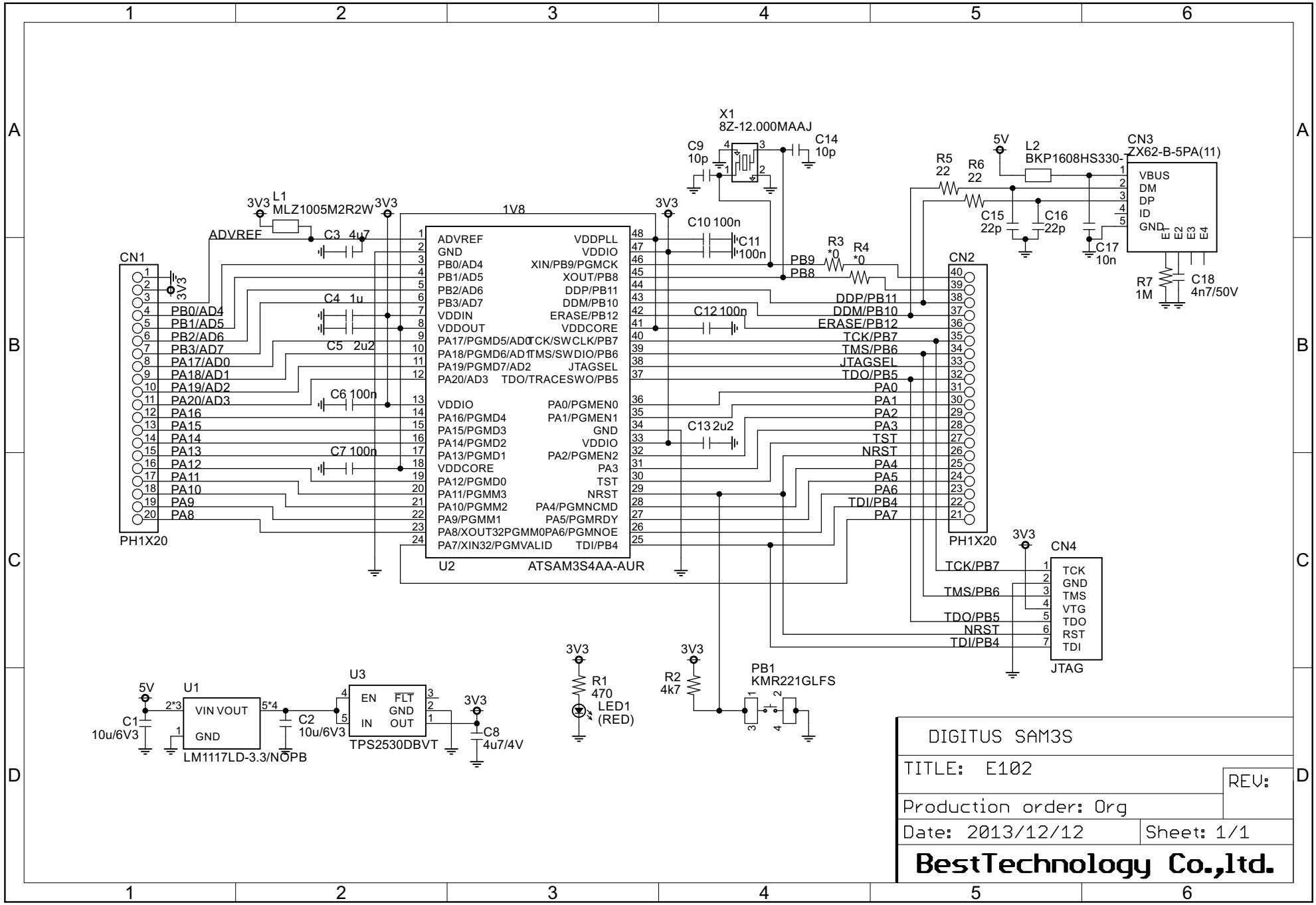
CN1
PH1X20
3V3
ADVREF
PB0/AD4
PB1/AD5
PB2/AD6
PB3/AD7
PA17/AD0
PA18/AD1
PA19/AD2
PA20/AD3
PA16
PA15
PA14
PA13
PA12
PA11
PA10
PA9
PA8
L1
MLZ1005M2R2W
C3 4u7
C4 1u
C5 2u2
C6 100n
C7 100n
1V8
ADVREF
GND
PB0/AD4
PB1/AD5
PB2/AD6
PB3/AD7
VDDIN
VDDOUT
PA17/PGMD5/AD0
PA18/PGMD6/AD1
PA19/PGMD7/AD2
PA20/AD3
VDDIO
PA16/PGMD4
PA15/PGMD3
PA14/PGMD2
PA13/PGMD1
VDDCORE
PA12/PGMD0
PA11/PGMM3
PA10/PGMM2
PA9/PGMM1
PA8/XOUT32PGMM0
PA7/XIN32/PGMVALID
VDDPLL
VDDIO
XIN/PB9/PGMCK
XOUT/PB8
DDP/PB11
DDM/PB10
ERASE/PB12
VDDCORE
TCK/SWCLK/PB7
TMS/SWDIO/PB6
JTAGSEL
TDO/TRACESWO/PB5
PA0/PGMEN0
PA1/PGMEN1
GND
VDDIO
PA2/PGMEN2
PA3
TST
NRST
PA4/PGMNCMD
PA5/PGMRDY
PA6/PGMNOE
TDI/PB4
U2
ATSAM3S4AA-AUR
C10 100n
C11 100n
C12 100n
C13 2u2
X1
8Z-12.000MAAJ
C9 10p
C14 10p
R3 *0
R4 *0
PB9
PB8
CN2
PH1X20
DDP/PB11
DDM/PB10
ERASE/PB12
TCK/PB7
TMS/PB6
JTAGSEL
TDO/PB5
PA0
PA1
PA2
PA3
TST
NRST
PA4
PA5
PA6
TDI/PB4
PA7
5V
L2
BKP1608HS330-
R5 22
R6 22
C15 22p
C16 22p
C17 10n
CN3
ZX62-B-5PA(11)
VBUS
DM
DP
ID
GND
E1
E2
E3
E4
R7 1M
C18 4n7/50V
CN4
JTAG
TCK
GND
TMS
VTG
TDO
RST
TDI
TCK/PB7
TMS/PB6
TDO/PB5
NRST
TDI/PB4
U1
LM1117LD-3.3/NOPB
VIN VOUT
GND
C1 10u/6V3
C2 10u/6V3
U3
TPS2530DBVT
EN
FLT
GND
IN
OUT
C8 4u7/4V
R1 470
LED1 (RED)
R2 4k7
PB1
KMR221GLFS
DIGITUS SAM3S
TITLE: E102
REV:
Production order: Org
Date: 2013/12/12
Sheet: 1/1
BestTechnology Co.,ltd.