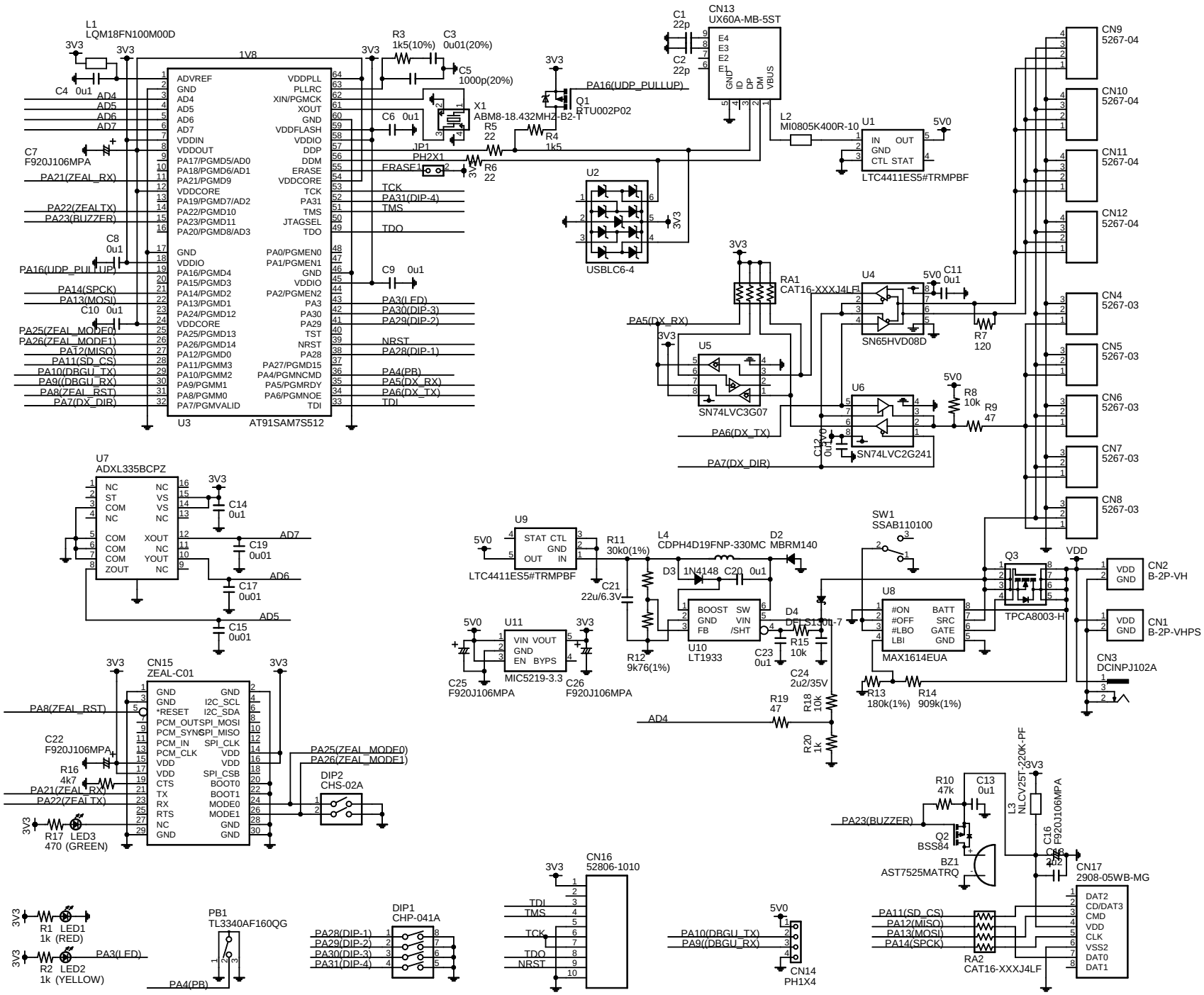
L1
LQM18FN100M00D
3V3
C4 0u1
C7
F920J106MPA
C8
0u1
C10 0u1
1V8
ADVREF
GND
AD4
AD5
AD6
AD7
VDDIN
VDDOUT
PA17/PGMD5/AD0
PA18/PGMD6/AD1
PA21/PGMD9
VDDCORE
PA19/PGMD7/AD2
PA22/PGMD10
PA23/PGMD11
PA20/PGMD8/AD3
GND
VDDIO
PA16/PGMD4
PA15/PGMD3
PA14/PGMD2
PA13/PGMD1
PA24/PGMD12
VDDCORE
PA25/PGMD13
PA26/PGMD14
PA12/PGMD0
PA11/PGMM3
PA10/PGMM2
PA9/PGMM1
PA8/PGMM0
PA7/PGMVALID
VDDPLL
PLLRC
XIN/PGMCK
XOUT
GND
VDDFLASH
VDDIO
DDP
DDM
ERASE
VDDCORE
TCK
PA31
TMS
JTAGSEL
TDO
PA0/PGMEN0
PA1/PGMEN1
GND
VDDIO
PA2/PGMEN2
PA3
PA30
PA29
TST
NRST
PA28
PA27/PGMD15
PA4/PGMNCMD
PA5/PGMRDY
PA6/PGMNOE
TDI
U3
AT91SAM7S512
PA21(ZEAI_RX)
PA22(ZEAI_TX)
PA23(BUZZER)
PA16(UDP_PULLUP)
PA14(SPCK)
PA13(MOSI)
PA25(ZEAI_MODE0)
PA26(ZEAI_MODE1)
PA12(MISO)
PA11(SD_CS)
PA10(DBGU_TX)
PA9((DBGU_RX)
PA8(ZEAI_RST)
PA7(DX_DIR)
R3
1k5(10%)
C3
0u01(20%)
C5
1000p(20%)
C6 0u1
X1
ABM8-18.432MHZ-B2-T
R5
22
R4
1k5
JP1
PH2X1
ERASE1
R6
22
TCK
PA31(DIP-4)
TMS
TDO
C9 0u1
PA3(LED)
PA30(DIP-3)
PA29(DIP-2)
NRST
PA28(DIP-1)
PA4(PB)
PA5(DX_RX)
PA6(DX_TX)
TDI
Q1
RTU002P02
PA16(UDP_PULLUP)
C1
22p
C2
22p
CN13
UX60A-MB-5ST
E4
E3
E2
E1
GND
ID
DP
DM
VBUS
L2
MI0805K400R-10
U1
IN OUT
GND
CTL STAT
LTC4411ES5#TRMPBF
5V0
U2
USBLC6-4
RA1
CAT16-XXXJ4LF
U4
SN65HVD08D
C11
0u1
R7
120
U5
SN74LVC3G07
U6
SN74LVC2G241
R8
10k
R9
47
C12
0u1
CN9
5267-04
CN10
5267-04
CN11
5267-04
CN12
5267-04
CN4
5267-03
CN5
5267-03
CN6
5267-03
CN7
5267-03
CN8
5267-03
U7
ADXL335BCPZ
NC
ST
COM
NC
COM
COM
COM
ZOUT
NC
VS
VS
NC
XOUT
NC
YOUT
NC
C14
0u1
C19
0u01
C17
0u01
C15
0u01
AD7
AD6
AD5
U9
STAT CTL
GND
OUT IN
LTC4411ES5#TRMPBF
R11
30k0(1%)
L4
CDPH4D19FNP-330MC
D2
MBRM140
D3 1N4148
C20 0u1
C21
22u/6.3V
R12
9k76(1%)
U10
LT1933
BOOST SW
GND VIN
FB /SHT
D4
DFLS130L-7
R15
10k
C23
0u1
C24
2u2/35V
R18
10k
R19
47
R20
1k
AD4
U11
VIN VOUT
GND
EN BYPS
MIC5219-3.3
C25
F920J106MPA
C26
F920J106MPA
SW1
SSAB110100
U8
#ON BATT
#OFF SRC
#LBO GATE
LBI GND
MAX1614EUA
R13
180k(1%)
R14
909k(1%)
Q3
TPCA8003-H
VDD
CN2
B-2P-VH
CN1
B-2P-VHPS
CN3
DCINPJ102A
CN15
ZEAL-C01
GND
GND
*RESET
PCM_OUT
PCM_SYNC
PCM_IN
PCM_CLK
VDD
VDD
CTS
TX
RX
RTS
NC
GND
I2C_SCL
I2C_SDA
SPI_MOSI
SPI_MISO
SPI_CLK
VDD
VDD
SPI_CSB
BOOT0
BOOT1
MODE0
MODE1
GND
GND
PA8(ZEAI_RST)
C22
F920J106MPA
R16
4k7
PA21(ZEAI_RX)
PA22(ZEAI_TX)
R17 LED3
470 (GREEN)
PA25(ZEAI_MODE0)
PA26(ZEAI_MODE1)
DIP2
CHS-02A
R10
47k
C13
0u1
L3
NLCV25T-220K-PF
C16
F920J106MPA
PA23(BUZZER)
Q2
BSS84
BZ1
AST7525MATRQ
CN17
2908-05WB-MG
DAT2
CD/DAT3
CMD
VDD
CLK
VSS2
DAT0
DAT1
PA11(SD_CS)
PA12(MISO)
PA13(MOSI)
PA14(SPCK)
RA2
CAT16-XXXJ4LF
R1 LED1
1k (RED)
R2 LED2
1k (YELLOW)
PB1
TL3340AF160QG
PA4(PB)
DIP1
CHP-041A
PA28(DIP-1)
PA29(DIP-2)
PA30(DIP-3)
PA31(DIP-4)
CN16
52806-1010
TDI
TMS
TCK
TDO
NRST
PA10(DBGU_TX)
PA9((DBGU_RX)
CN14
PH1X4