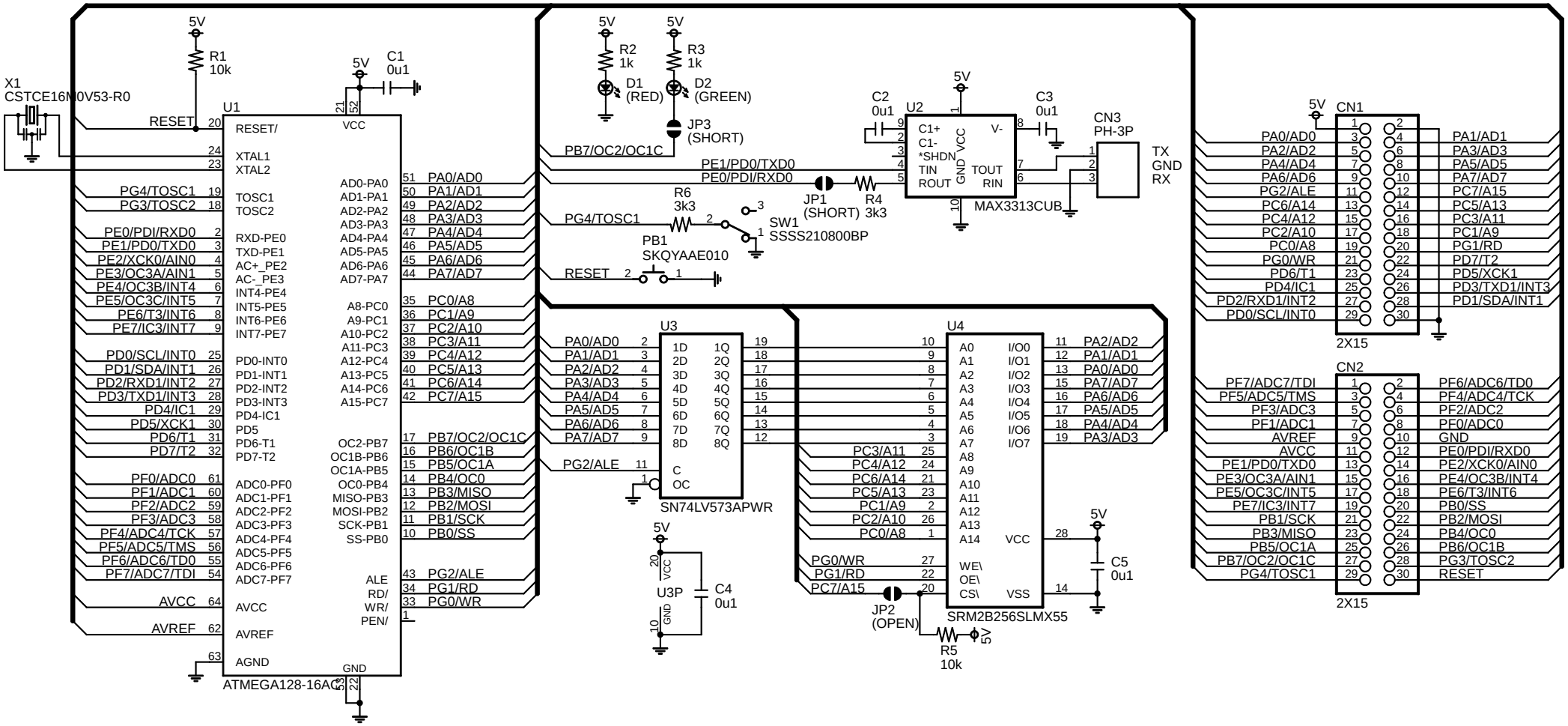
X1
CSTCE16M0V53-R0
5V
R1
10k
RESET
U1
ATMEGA128-16AC
RESET/
XTAL1
XTAL2
TOSC1
TOSC2
RXD-PE0
TXD-PE1
AC+_PE2
AC-_PE3
INT4-PE4
INT5-PE5
INT6-PE6
INT7-PE7
PD0-INT0
PD1-INT1
PD2-INT2
PD3-INT3
PD4-IC1
PD5
PD6-T1
PD7-T2
ADC0-PF0
ADC1-PF1
ADC2-PF2
ADC3-PF3
ADC4-PF4
ADC5-PF5
ADC6-PF6
ADC7-PF7
AVCC
AVREF
AGND
VCC
GND
AD0-PA0
AD1-PA1
AD2-PA2
AD3-PA3
AD4-PA4
AD5-PA5
AD6-PA6
AD7-PA7
A8-PC0
A9-PC1
A10-PC2
A11-PC3
A12-PC4
A13-PC5
A14-PC6
A15-PC7
OC2-PB7
OC1B-PB6
OC1A-PB5
OC0-PB4
MISO-PB3
MOSI-PB2
SCK-PB1
SS-PB0
ALE
RD/
WR/
PEN/
C1
0u1
R2
1k
R3
1k
D1
(RED)
D2
(GREEN)
JP3
(SHORT)
PB7/OC2/OC1C
PE1/PD0/TXD0
PE0/PDI/RXD0
JP1
(SHORT)
R4
3k3
U2
C2
0u1
C3
0u1
C1+
C1-
*SHDN
TIN
ROUT
VCC
GND
V-
TOUT
RIN
MAX3313CUB
CN3
PH-3P
TX
GND
RX
PG4/TOSC1
R6
3k3
SW1
SSSS210800BP
PB1
SKQYAAE010
RESET
CN1
2X15
CN2
2X15
U3
SN74LV573APWR
1D
2D
3D
4D
5D
6D
7D
8D
1Q
2Q
3Q
4Q
5Q
6Q
7Q
8Q
C
OC
PG2/ALE
U3P
C4
0u1
U4
SRM2B256SLMX55
A0
A1
A2
A3
A4
A5
A6
A7
A8
A9
A10
A11
A12
A13
A14
WE\
OE\
CS\
I/O0
I/O1
I/O2
I/O3
I/O4
I/O5
I/O6
I/O7
VCC
VSS
PG0/WR
PG1/RD
PC7/A15
JP2
(OPEN)
R5
10k
C5
0u1