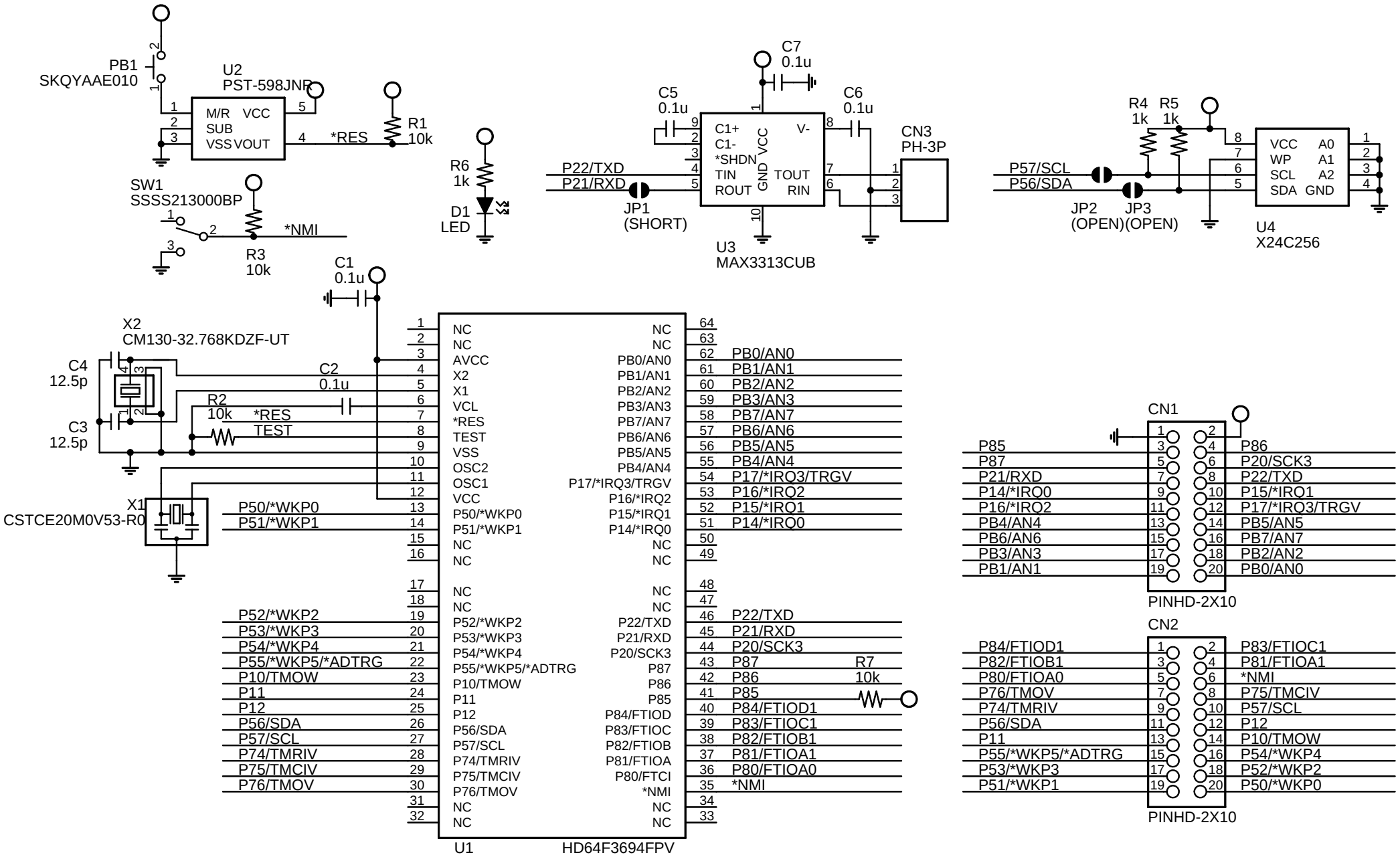
PB1
SKQYAAE010
U2
PST-598JNR
M/R VCC
SUB
VSS VOUT
*RES
R1
10k
SW1
SSSS213000BP
*NMI
R3
10k
R6
1k
D1
LED
C7
0.1u
C5
0.1u
C6
0.1u
C1+
C1-
*SHDN
TIN
ROUT
VCC
GND
V-
TOUT
RIN
P22/TXD
P21/RXD
JP1
(SHORT)
U3
MAX3313CUB
CN3
PH-3P
R4
1k
R5
1k
P57/SCL
P56/SDA
JP2
(OPEN)
JP3
(OPEN)
VCC A0
WP A1
SCL A2
SDA GND
U4
X24C256
C1
0.1u
X2
CM130-32.768KDZF-UT
C4
12.5p
C3
12.5p
C2
0.1u
R2
10k
*RES
TEST
X1
CSTCE20M0V53-R0
P50/*WKP0
P51/*WKP1
P52/*WKP2
P53/*WKP3
P54/*WKP4
P55/*WKP5/*ADTRG
P10/TMOW
P11
P12
P56/SDA
P57/SCL
P74/TMRIV
P75/TMCIV
P76/TMOV
NC
AVCC
X2
X1
VCL
*RES
TEST
VSS
OSC2
OSC1
VCC
P50/*WKP0
P51/*WKP1
P52/*WKP2
P53/*WKP3
P54/*WKP4
P55/*WKP5/*ADTRG
P10/TMOW
P11
P12
P56/SDA
P57/SCL
P74/TMRIV
P75/TMCIV
P76/TMOV
PB0/AN0
PB1/AN1
PB2/AN2
PB3/AN3
PB7/AN7
PB6/AN6
PB5/AN5
PB4/AN4
P17/*IRQ3/TRGV
P16/*IRQ2
P15/*IRQ1
P14/*IRQ0
P22/TXD
P21/RXD
P20/SCK3
P87
P86
P85
P84/FTIOD
P83/FTIOC
P82/FTIOB
P81/FTIOA
P80/FTCI
*NMI
U1
HD64F3694FPV
R7
10k
CN1
PINHD-2X10
CN2
PINHD-2X10