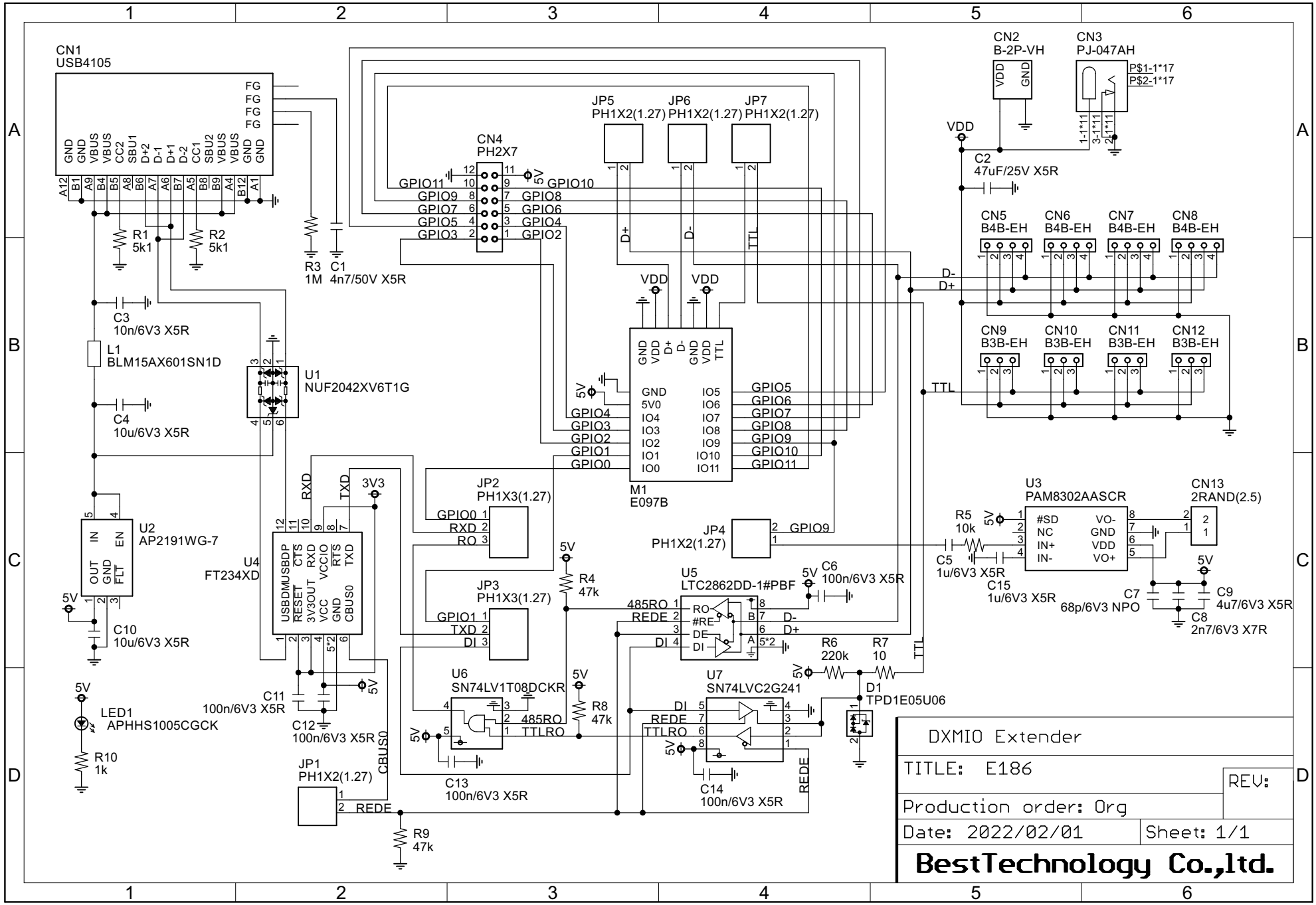
CN1
USB4105
CN2
B-2P-VH
CN3
PJ-047AH
CN4
PH2X7
JP5
PH1X2(1.27)
JP6
PH1X2(1.27)
JP7
PH1X2(1.27)
R1
5k1
R2
5k1
R3
1M
C1
4n7/50V X5R
C2
47uF/25V X5R
C3
10n/6V3 X5R
L1
BLM15AX601SN1D
C4
10u/6V3 X5R
U1
NUF2042XV6T1G
U2
AP2191WG-7
C10
10u/6V3 X5R
U4
FT234XD
C11
100n/6V3 X5R
C12
100n/6V3 X5R
LED1
APHHS1005CGCK
R10
1k
JP1
PH1X2(1.27)
R9
47k
M1
E097B
JP2
PH1X3(1.27)
JP3
PH1X3(1.27)
JP4
PH1X2(1.27)
R4
47k
U5
LTC2862DD-1#PBF
C6
100n/6V3 X5R
U6
SN74LV1T08DCKR
R8
47k
C13
100n/6V3 X5R
U7
SN74LVC2G241
C14
100n/6V3 X5R
R6
220k
R7
10
D1
TPD1E05U06
CN5
B4B-EH
CN6
B4B-EH
CN7
B4B-EH
CN8
B4B-EH
CN9
B3B-EH
CN10
B3B-EH
CN11
B3B-EH
CN12
B3B-EH
U3
PAM8302AASCR
CN13
2RAND(2.5)
R5
10k
C5
1u/6V3 X5R
C15
1u/6V3 X5R
C7
68p/6V3 NPO
C9
4u7/6V3 X5R
C8
2n7/6V3 X7R
DXMIO Extender
TITLE: E186
REV:
Production order: Org
Date: 2022/02/01
Sheet: 1/1
BestTechnology Co.,ltd.