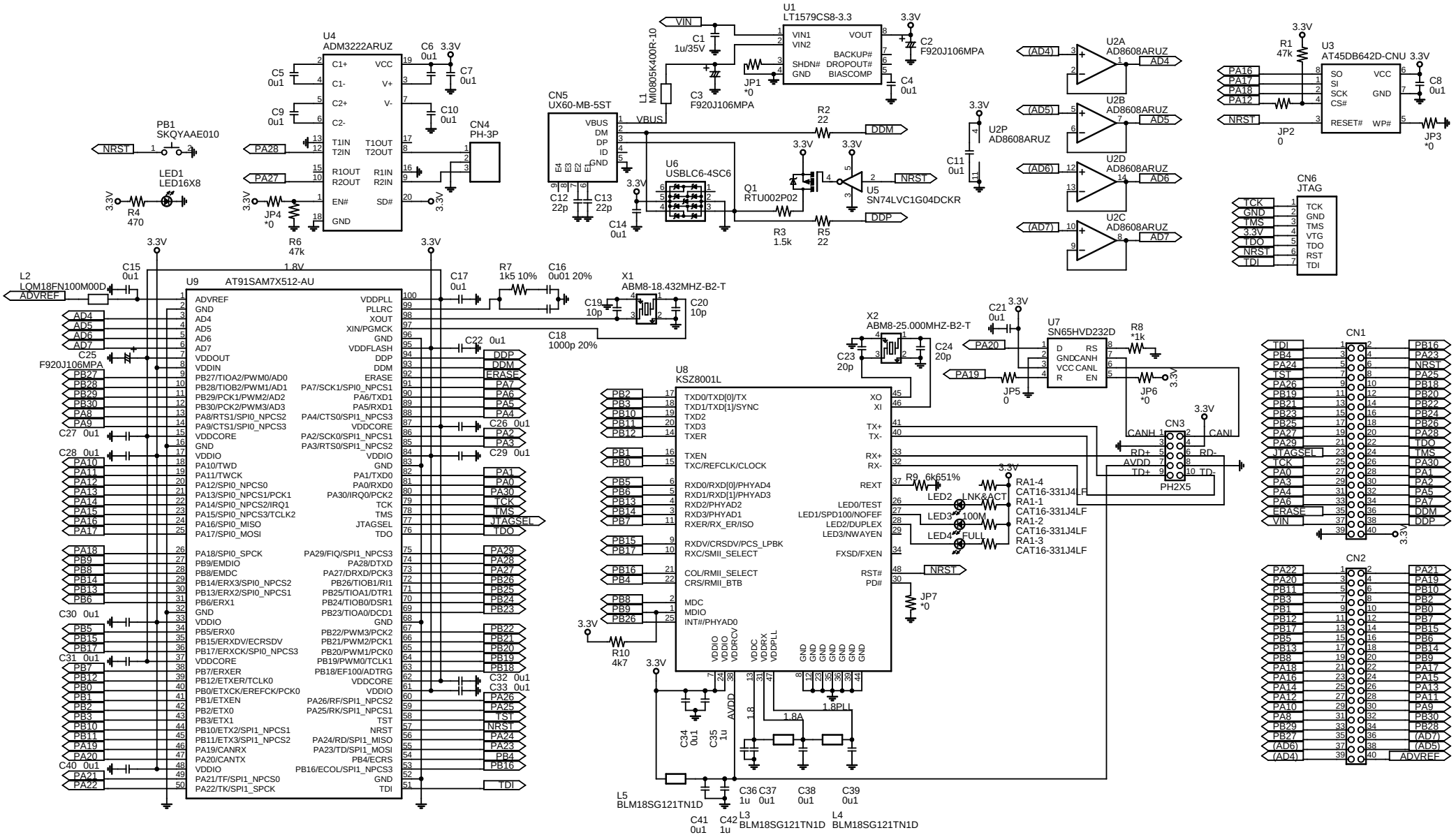
U1
LT1579CS8-3.3
VIN1
VIN2
VOUT
BACKUP#
SHDN#
DROPOUT#
GND
BIASCOMP
VIN
C1
1u/35V
C2
F920J106MPA
C3
F920J106MPA
C4
0u1
JP1
*0
L1
MI0805K400R-10
U4
ADM3222ARUZ
C1+
C1-
C2+
C2-
T1IN
T2IN
R1OUT
R2OUT
EN#
GND
VCC
V+
V-
T1OUT
T2OUT
R1IN
R2IN
SD#
C5
0u1
C9
0u1
C6
0u1
C7
0u1
C10
0u1
CN4
PH-3P
PB1
SKQYAAE010
NRST
PA28
PA27
LED1
LED16X8
R4
470
JP4
*0
R6
47k
CN5
UX60-MB-5ST
VBUS
DM
DP
ID
GND
C12
22p
C13
22p
C14
0u1
U6
USBLC6-4SC6
R2
22
DDM
DDP
Q1
RTU002P02
R3
1.5k
R5
22
U5
SN74LVC1G04DCKR
U2P
AD8608ARUZ
C11
0u1
U2A
AD8608ARUZ
U2B
AD8608ARUZ
U2D
AD8608ARUZ
U2C
AD8608ARUZ
AD4
AD5
AD6
AD7
R1
47k
U3
AT45DB642D-CNU
SO
SI
SCK
CS#
RESET#
WP#
C8
0u1
JP2
0
JP3
*0
CN6
JTAG
TCK
GND
TMS
3.3V
TDO
NRST
TDI
VTG
RST
L2
LQM18FN100M00D
ADVREF
C15
0u1
U9
AT91SAM7X512-AU
1.8V
C17
0u1
R7
1k5 10%
C16
0u01 20%
X1
ABM8-18.432MHZ-B2-T
C19
10p
C20
10p
C18
1000p 20%
C22 0u1
C25
F920J106MPA
C27 0u1
C28 0u1
C26 0u1
C29 0u1
C30 0u1
C31 0u1
C32 0u1
C33 0u1
C40 0u1
ADVREF
AD4
AD5
AD6
AD7
PB27
PB28
PB29
PB30
PB8
PA9
PA10
PA11
PA12
PA13
PA14
PA15
PA16
PA17
PA18
PB9
PB8
PB14
PB13
PB6
PB5
PB15
PB17
PB7
PB12
PB0
PB1
PB2
PB3
PB10
PB11
PA19
PA20
PA21
PA22
DDP
DDM
ERASE
PA7
PA6
PA5
PA4
PA2
PA3
PA1
PA0
PA30
TCK
TMS
JTAGSEL
TDO
PA29
PA28
PA27
PB26
PB25
PB24
PB23
PB22
PB21
PB20
PB19
PB18
PA26
PA25
TST
NRST
PA24
PA23
PB4
PB16
TDI
X2
ABM8-25.000MHZ-B2-T
C21
0u1
C23
20p
C24
20p
U7
SN65HVD232D
D
GND
VCC
R
RS
CANH
CANL
EN
R8
*1k
JP5
0
JP6
*0
CN3
CANH
CANL
RD+
AVDD
TD+
RD-
TD-
PH2X5
U8
KSZ8001L
TXD0/TXD[0]/TX
TXD1/TXD[1]/SYNC
TXD2
TXD3
TXER
TXEN
TXC/REFCLK/CLOCK
RXD0/RXD[0]/PHYAD4
RXD1/RXD[1]/PHYAD3
RXD2/PHYAD2
RXD3/PHYAD1
RXER/RX_ER/ISO
RXDV/CRSDV/PCS_LPBK
RXC/SMII_SELECT
COL/RMII_SELECT
CRS/RMII_BTB
MDC
MDIO
INT#/PHYAD0
XO
XI
TX+
TX-
RX+
RX-
REXT
LED0/TEST
LED1/SPD100/NOFEF
LED2/DUPLEX
LED3/NWAYEN
FXSD/FXEN
RST#
PD#
R9
6k651%
LED2
LED3
LED4
LNK&ACT
100M
FULL
RA1-4
CAT16-331J4LF
RA1-1
CAT16-331J4LF
RA1-2
CAT16-331J4LF
RA1-3
CAT16-331J4LF
JP7
*0
R10
4k7
VDDIO
VDDRCV
VDDC
VDDRX
VDDPLL
GND
AVDD
1.8
1.8A
1.8PLL
C34
0u1
C35
1u
L5
BLM18SG121TN1D
C36
1u
C37
0u1
C38
0u1
C39
0u1
C41
0u1
C42
1u
L3
BLM18SG121TN1D
L4
BLM18SG121TN1D
CN1
CN2
TDI
PB4
PA24
TST
PA26
PB19
PB21
PB23
PB25
PA27
PA29
JTAGSEL
TCK
PA0
PA3
PA4
PA6
ERASE
VIN
PB16
PB23
NRST
PA25
PB18
PB22
PB24
PB26
PB28
TDO
TMS
PA30
PA1
PA2
PA5
PA7
DDM
DDP
PA22
PA20
PB11
PB3
PB1
PB12
PB17
PB5
PB13
PB8
PA18
PA16
PA14
PA12
PA10
PA8
PB29
PB27
(AD6)
(AD4)
PA21
PA19
PB10
PB2
PB0
PB7
PB15
PB6
PB14
PB9
PA17
PA15
PA13
PA11
PA9
PB30
PB28
(AD7)
(AD5)
ADVREF