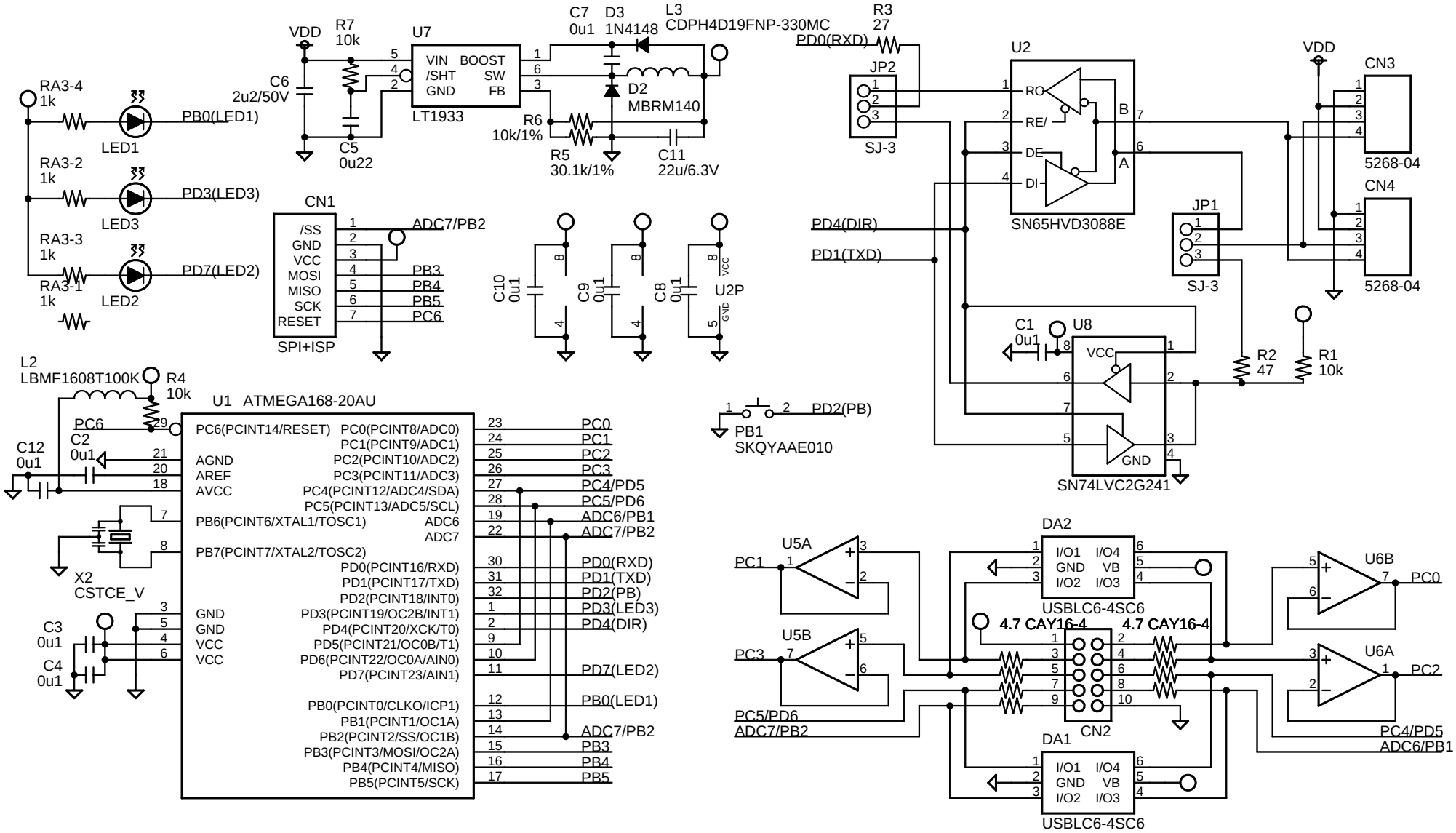
RA3-4
1k
LED1
PB0(LED1)
RA3-2
1k
LED3
PD3(LED3)
RA3-3
1k
LED2
PD7(LED2)
RA3-1
1k
VDD
R7
10k
C6
2u2/50V
C5
0u22
U7
VIN
BOOST
/SHT
SW
GND
FB
LT1933
C7
0u1
D3
1N4148
L3
CDPH4D19FNP-330MC
D2
MBRM140
R6
10k/1%
R5
30.1k/1%
C11
22u/6.3V
R3
27
PD0(RXD)
JP2
SJ-3
U2
RO
RE/
DE
DI
B
A
SN65HVD3088E
VDD
CN3
5268-04
CN4
5268-04
JP1
SJ-3
PD4(DIR)
PD1(TXD)
CN1
/SS
GND
VCC
MOSI
MISO
SCK
RESET
SPI+ISP
ADC7/PB2
PB3
PB4
PB5
PC6
C10
0u1
C9
0u1
C8
0u1
U2P
VCC
GND
C1
0u1
U8
VCC
GND
SN74LVC2G241
R2
47
R1
10k
L2
LBMF1608T100K
R4
10k
U1 ATMEGA168-20AU
PC6
C2
0u1
C12
0u1
AGND
AREF
AVCC
PB6(PCINT6/XTAL1/TOSC1)
PB7(PCINT7/XTAL2/TOSC2)
X2
CSTCE_V
C3
0u1
C4
0u1
GND
GND
VCC
VCC
PC6(PCINT14/RESET)
PC0(PCINT8/ADC0)
PC1(PCINT9/ADC1)
PC2(PCINT10/ADC2)
PC3(PCINT11/ADC3)
PC4(PCINT12/ADC4/SDA)
PC5(PCINT13/ADC5/SCL)
ADC6
ADC7
PD0(PCINT16/RXD)
PD1(PCINT17/TXD)
PD2(PCINT18/INT0)
PD3(PCINT19/OC2B/INT1)
PD4(PCINT20/XCK/T0)
PD5(PCINT21/OC0B/T1)
PD6(PCINT22/OC0A/AIN0)
PD7(PCINT23/AIN1)
PB0(PCINT0/CLKO/ICP1)
PB1(PCINT1/OC1A)
PB2(PCINT2/SS/OC1B)
PB3(PCINT3/MOSI/OC2A)
PB4(PCINT4/MISO)
PB5(PCINT5/SCK)
PC0
PC1
PC2
PC3
PC4/PD5
PC5/PD6
ADC6/PB1
ADC7/PB2
PD0(RXD)
PD1(TXD)
PD2(PB)
PD3(LED3)
PD4(DIR)
PD7(LED2)
PB0(LED1)
ADC7/PB2
PB3
PB4
PB5
PD2(PB)
PB1
SKQYAAE010
U5A
PC1
U5B
PC3
PC5/PD6
ADC7/PB2
DA2
I/O1
I/O4
GND
VB
I/O2
I/O3
USBLC6-4SC6
4.7 CAY16-4
4.7 CAY16-4
CN2
DA1
USBLC6-4SC6
U6B
PC0
U6A
PC2
PC4/PD5
ADC6/PB1